Headlights (cont'd)

Canada

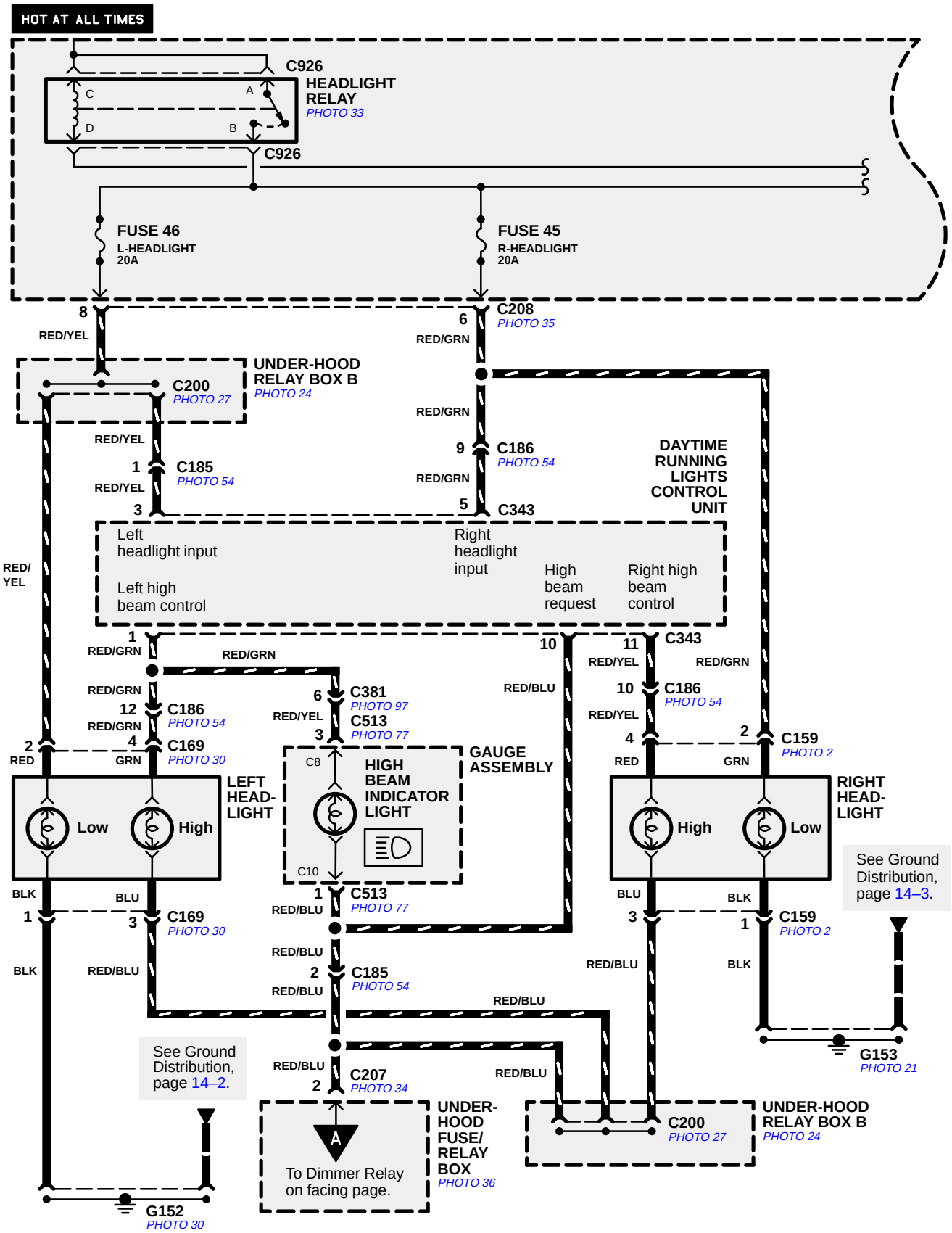

©2004 American Honda Motor Co., Inc.